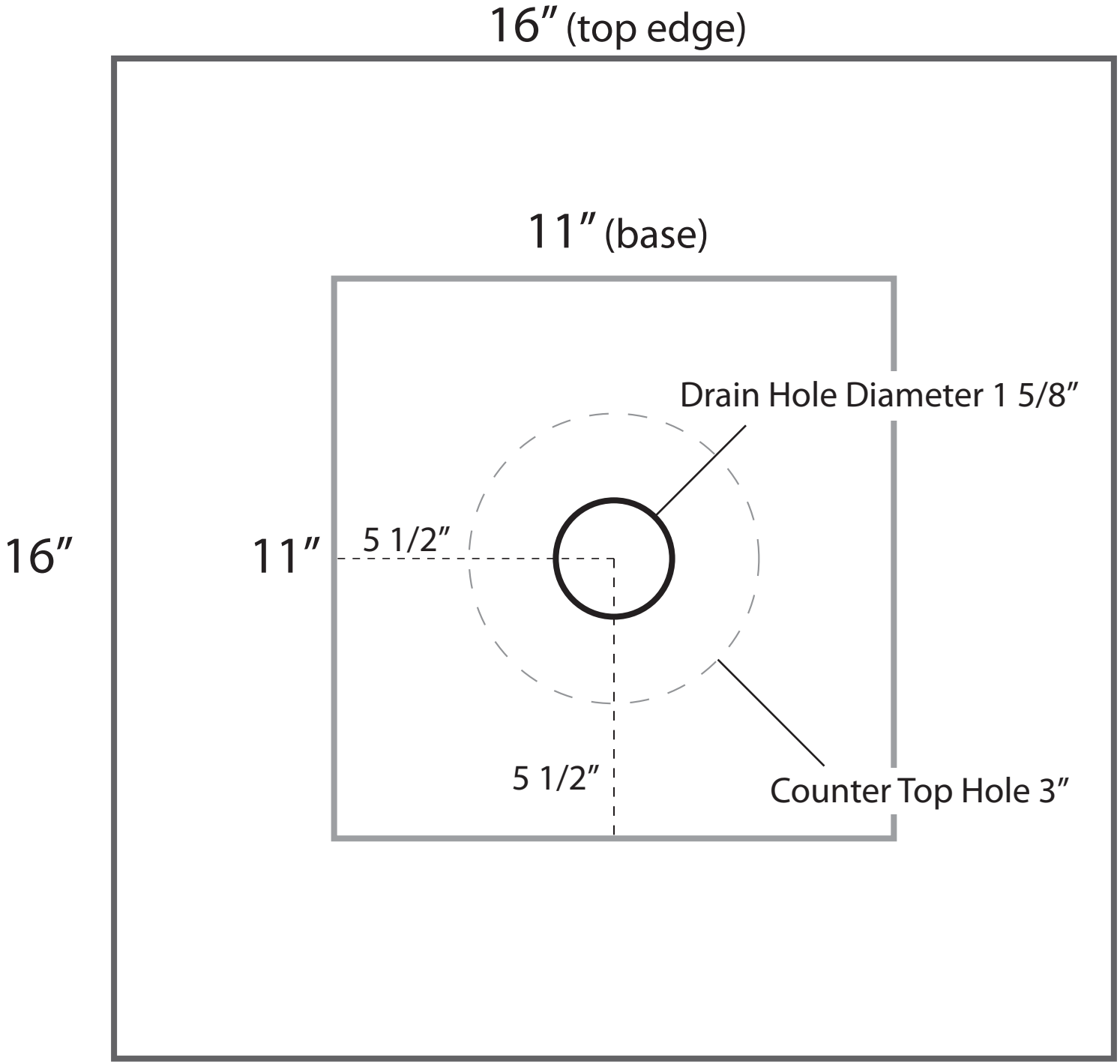
16″ (top edge)
11″ (base)
Drain Hole Diameter 1 5/8″
16″
11″
5 1/2″
5 1/2″
Counter Top Hole 3″

CB-006